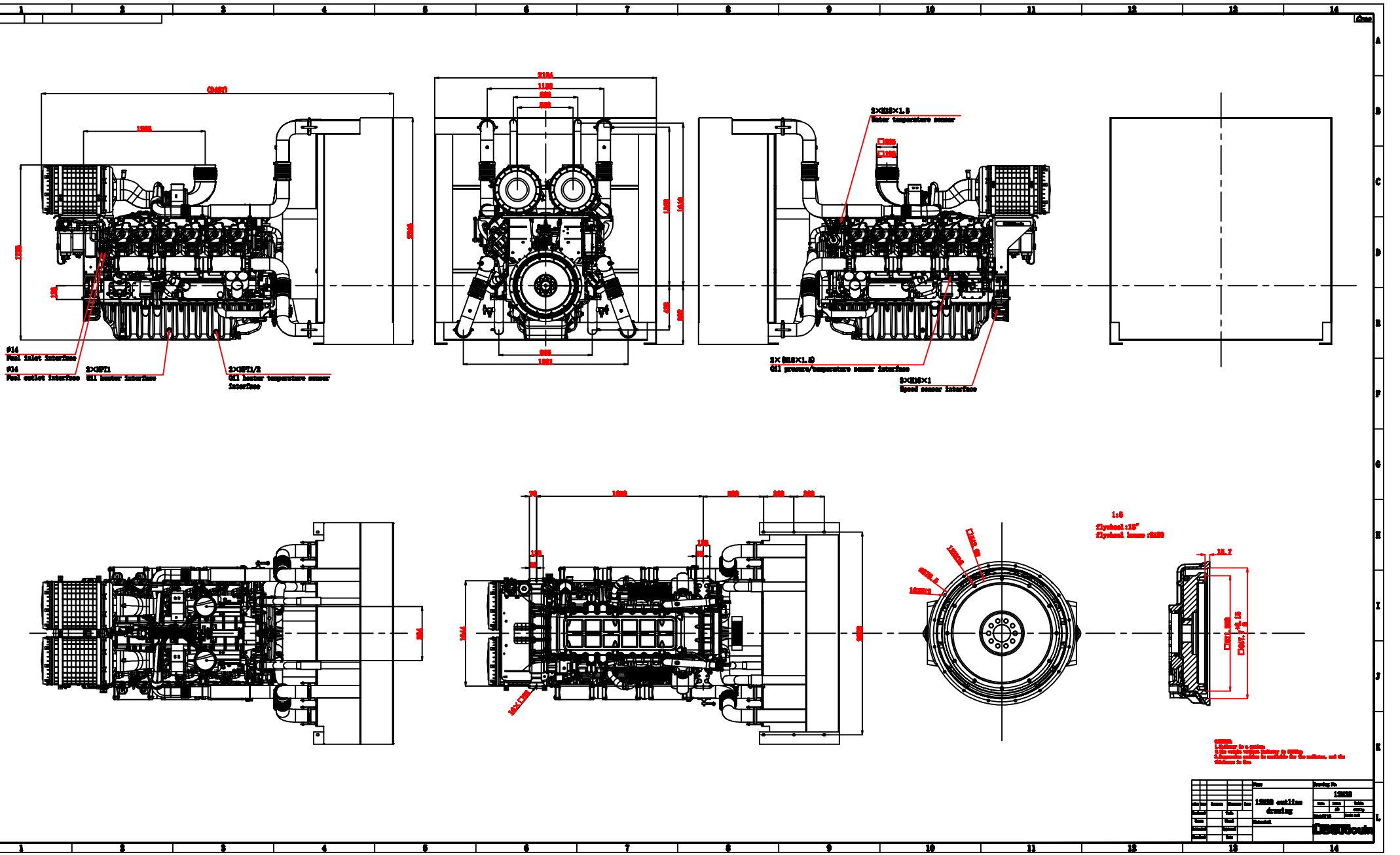

Ø14
Fuel inlet interface
Ø14
Fuel outlet interface
2×NPT1
Oil heater interface
2×NPT1/2
Oil heater temperature sensor interface
2×M18×1.5
Water temperature sensor
2×(M18×1.5)
Oil pressure/temperature sensor interface
3×M16×1
Speed sensor interface
1:5
flywheel:15"
flywheel house:SAE0
12M20 outline drawing