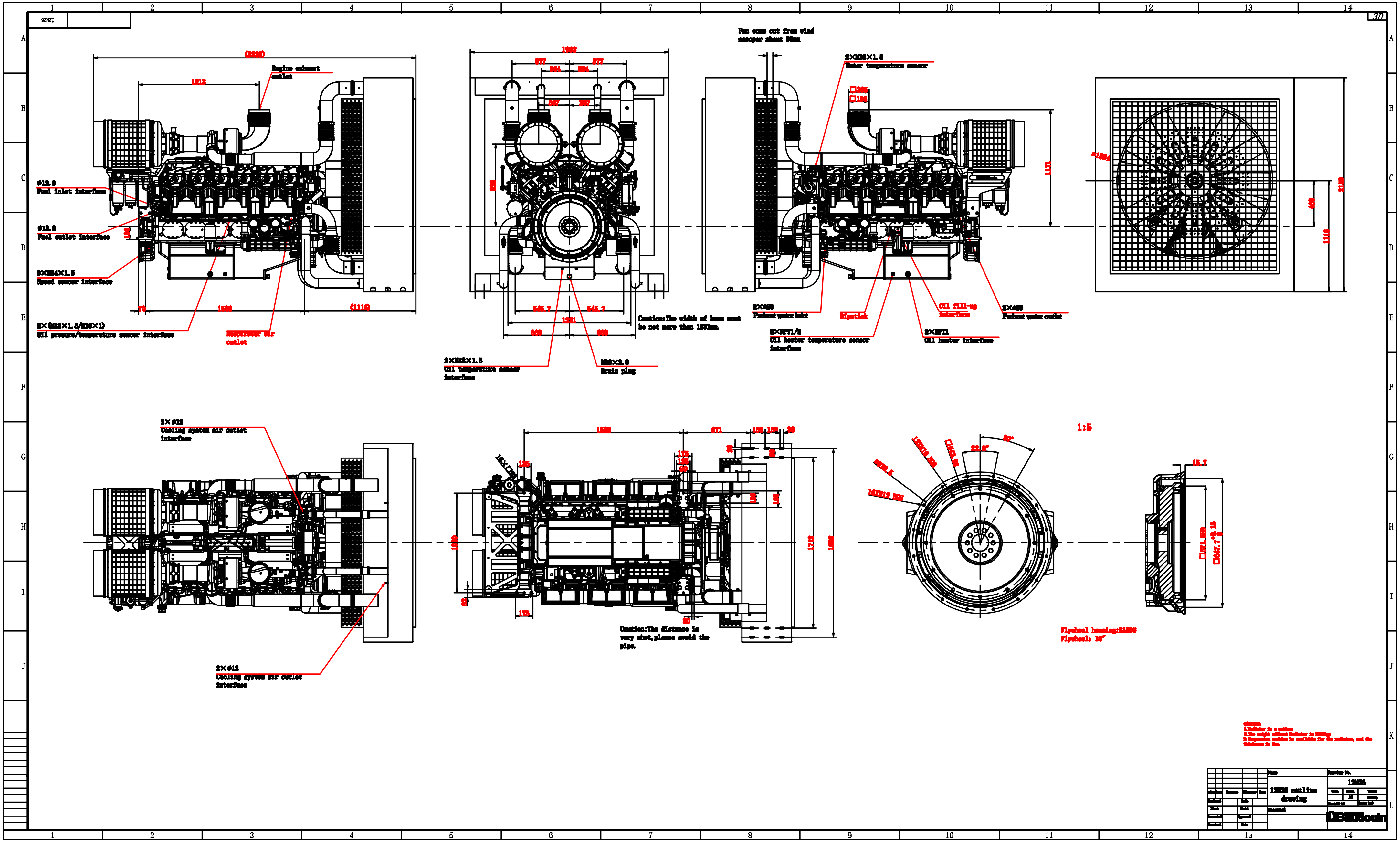

Engine exhaust outlet
Φ12.6
Fuel inlet interface
Φ12.6
Fuel outlet interface
3×M14×1.5
Speed sensor interface
2×(M18×1.5/M10×1)
Oil pressure/temperature sensor interface
Respirator air outlet
2×M18×1.5
Oil temperature sensor interface
M30×2.0
Drain plug
Caution:The width of base must be not more than 1231mm.
Fan come out from wind scooper about 50mm
2×M18×1.5
Water temperature sensor
Dipstick
Oil fill-up interface
Oil heater interface
Flushed water outlet
2×Φ12
Cooling system air outlet interface
2×Φ12
Cooling system air outlet interface
Caution:The distance is very shot,please avoid the pipe.
1:5
Flywheel housing:SAE00
Flywheel: 18"
12M26 outline drawing
12M26
Material
Baudouin