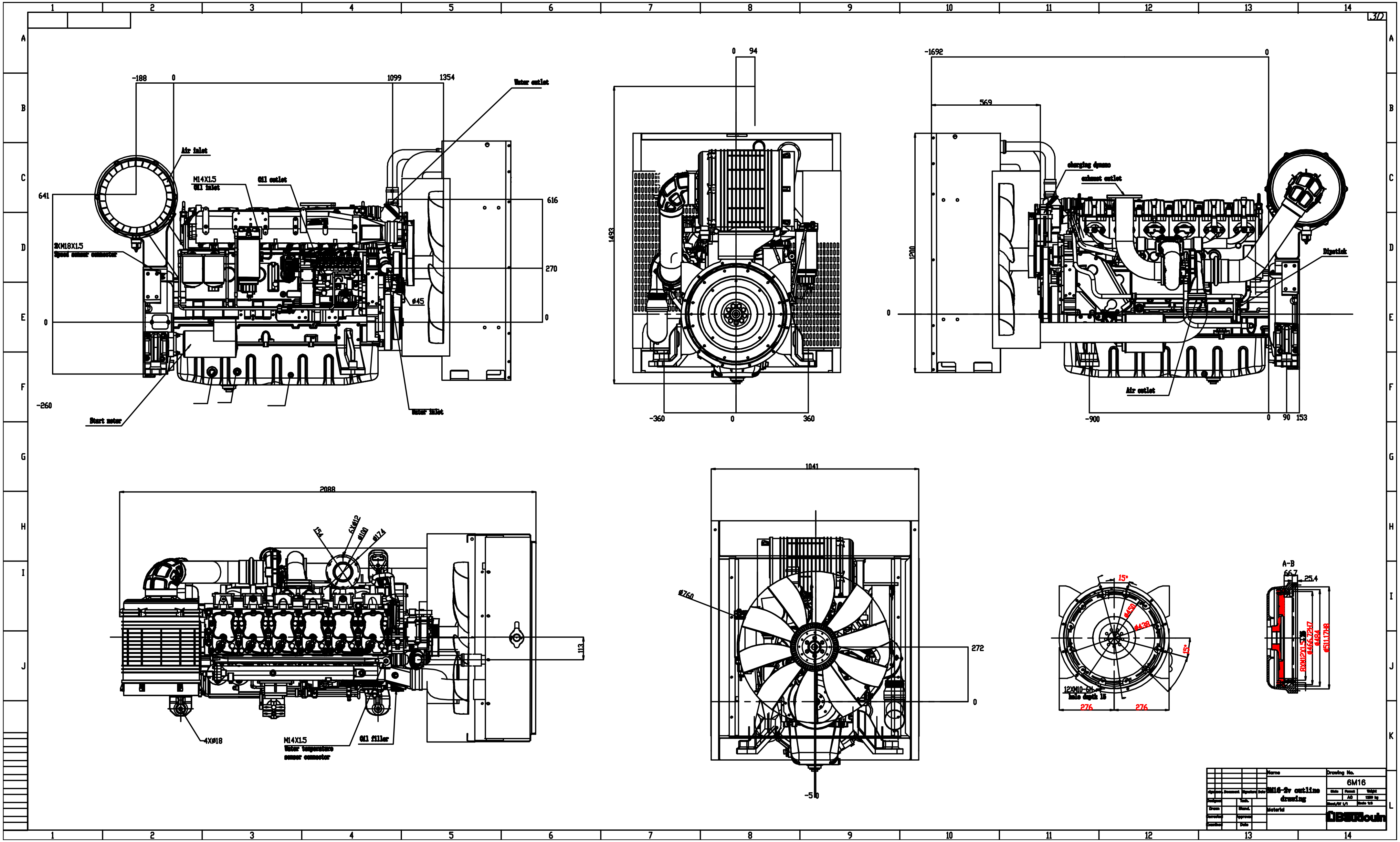

Water outlet
Air inlet
M14X1.5
Oil inlet
Oil outlet
8XM18X1.5
Speed sensor connector
Start motor
Water inlet
ø45
charging dynamo
exhaust outlet
Dipstick
Air outlet
-188
0
1099
1354
641
616
270
-260
94
1493
-360
360
-1692
569
1200
-900
90
153
2088
15°
6X
ø12
ø100
ø174
113
4Xø18
M14X1.5
Water temperature sensor connector
Oil filler
1041
ø760
272
-50
12XM10-6H
hole depth 15
276
A-B
66.7
25.4
ø438
ø450
8XM12X1.5
ø466.72H7
ø494
ø511.17H8
Name
6M16-2v outline drawing
Drawing No.
6M16
Format
A0
Weight
Sheet/Of 1/1
Scale 1:5
Designed
Tech.
Drawn
Stand.
Corrected
Approved
Examined
Date
Material
Baudouin